This material is copyrighted and protected by U.S. anti-piracy laws.

© 2017 by Teacher to Teacher Press. All rights reserved.

As a purchaser of this handout, you have a single-user license. You may duplicate student activity pages for your own classroom use only. Any unauthorized duplication of these materials by physical or electronic means or any public performance and demonstration of these materials without prior written consent of Teacher to Teacher Press are strictly prohibited.

If you should need written permission, you may contact Teacher to Teacher Press at their website, www.tttpress.com.

Horses, Pigs, & Cows

Developing critical thinking, proportional reasoning, and algebraic skill with whole numbers, decimals, and integers

By Brad Fulton
Educator of the Year, 2005
brad@tttpress.com www.tttpress.com
530-547-4687
P.O. Box 233, Millville, CA 96062

Teacher to Teacher Press

Join us!

Facebook: TeacherToTeacherPress

Twitter: @tttpress

YouTube /watchtttpress

Brad Fulton

Educator of the Year

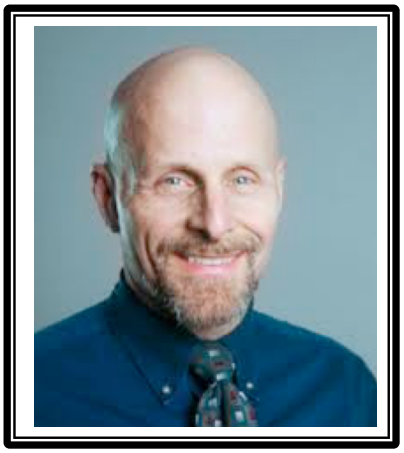

PO Box 233, Millville, CA 96062
(530) 547-4687
brad@tttpress.com

- ♦ Consultant
- ♦ Educator
- ♦ Author
- ♦ Keynote presenter
- ♦ Teacher trainer
- ♦ Conference speaker

Known throughout the country for motivating and engaging teachers and students, Brad has co-authored over a dozen books that provide easy-to-teach yet mathematically rich activities for busy teachers while teaching full time for over 30 years. In addition, he has co-authored over 40 teacher training manuals full of activities and ideas that help teachers who believe mathematics must be both meaningful and powerful.

Seminar leader and trainer of mathematics teachers

- ♦ 2005 California League of Middle Schools Educator of the Year
- ♦ California Math Council and NCTM national featured presenter
- ♦ Lead trainer for summer teacher training institutes
- ♦ Trainer/consultant for district, county, regional, and national workshops

Author and co-author of mathematics curriculum

- ♦ Simply Great Math Activities series: six books covering all major strands
- ♦ Angle On Geometry Program: over 400 pages of research-based geometry instruction
- ♦ Math Discoveries series: bringing math alive for students in middle schools
- ♦ Teacher training seminar materials handbooks for elementary, middle, and secondary school

Available for workshops, keynote addresses, and conferences

All workshops provide participants with complete, ready-to-use activities that require minimal preparation and give clear and specific directions. Participants also receive journal prompts, homework suggestions, and ideas for extensions and assessment.

Brad's math activities are the best I've seen in 38 years of teaching!
Wayne Dequer, 7th grade math teacher, Arcadia, CA

"I can't begin to tell you how much you have inspired me!"
Sue Bonesteel, Math Dept. Chair, Phoenix, AZ

"Your entire audience was fully involved in math!! When they chatted, they chatted math. Real thinking!"
Brenda McGaffigan, principal, Santa Ana, CA

"Absolutely engaging. I can teach algebra to second graders!"
Lisa Fellers, teacher

References available upon request

Like my activities? How about giving me a favorable rating on the Teachers Pay Teachers website? Four stars would be much appreciated and would help me sleep better at night.

Like me even more? Then please don't make copies for your colleagues. I know it's tempting when they say, "Wow! Groovy activity! Can I have a copy?" But this is how I make my money, and why are they still saying "groovy" anyway?

If we make copies for our friends, can we honestly tell our students not to copy or take things that don't belong to them? (Ouch!)

Half priced site licensed copies are available on the TPT website. Please encourage them to take advantage of this affordable option. Okay?

Thanks and happy teaching,

Brad

© 2018 by Brad Fulton and TTT Press

I want...

- ☐ a) Effective staff development
- ☐ b) Affordable staff development
- ☐ c) Ongoing staff development
- ☒ d) *ALL OF THE ABOVE!*

www.tttpress.com
brad@tttpress.com

Great DVD presentations offer quality mathematics staff development at a fraction of the cost!

- **Effective because** they are classroom-tested and classroom-proven. These popular DVDs of Brad's trainings have been utilized by teachers throughout the country for years.
- **Affordable because** they are site-licensed. Buy only one copy for your whole school, print as many copies of the handouts as you need.
- **Ongoing because** when you hire new staff, simply hit "play" and the training begins. There's no need to bring back the consultant.

© 2018 by Brad Fulton and TTT Press

Horses, Pigs, and Cows

Developing Number Sense, Proportional Reasoning, and Algebraic Thinking through Skills Practice

Overview:

Use this creative practice to foster skills with whole numbers, decimals, and integers and to develop rich number sense. Students will find countless patterns in this activity. This will help them to master and solve the puzzles even if they don't go so far as to use the proportional reasoning or to discover the formula. However, it is also easy to help students discover the formulas that will allow them to solve even the most difficult of these problems.

Required Materials:

☒ Paper

☒ Activity masters

Optional Materials:

☐ Calculators

Procedure:

1 Draw the arrangement of pens on the board as you explain the problem to the students. Tell them that there are horses in the circular pen, pigs in the square pen, and cows in the hexagonal pen. (You may, of course, simplify the diagrams of the pens.) The students' job is to find out how many of each animal are in each pen. On each path between pens is a sign showing the sum of the animals in the two adjacent pens. Thus in the sample on the right, the total number of horses and pigs is eight. There are a total of eight horses and cows, and there are a total of 14 pigs and cows. Eventually, some students will discover through trial and error that the only solution is that there is one horse, seven pigs, and seven cows. They may also realize that the number of animals in any pen could not be more than eight. Otherwise, some signs would need higher numbers on them.

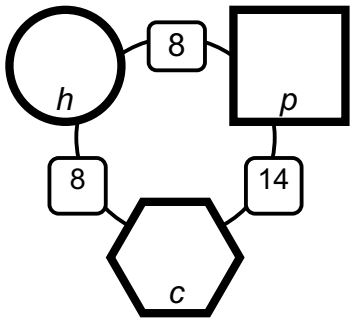

2 Repeat this with other problems. Here ae some samples you can use. Show the students the clues, but not the answers, of course. The answers are written in italics in the polygon pens.

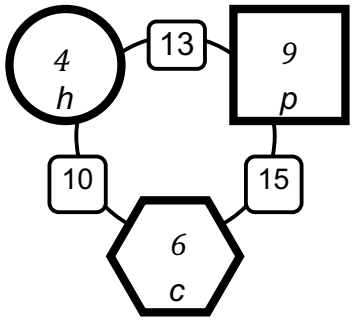

© 2018 by Brad Fulton and TTT Press

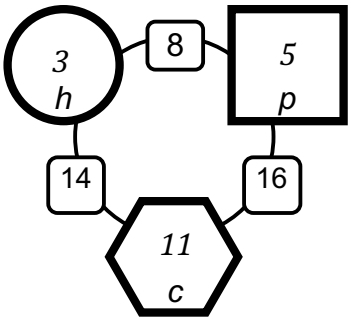

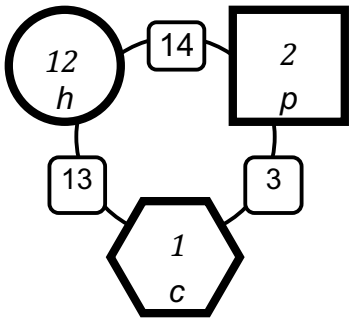

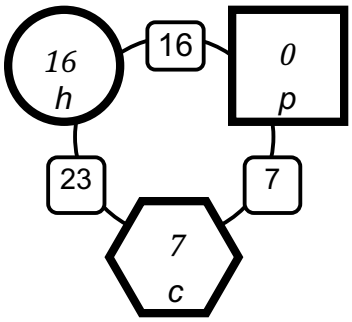

For more advanced students, use more rigorous numbers. You can even insert fractions. Although that means that someone has a "side of beef", it can still be solved mathematically and makes the lesson more challenging.

3 To lead your students to a discovery of the patterns and formulas that govern these problems, begin with simple examples where the number of animals in each pen is equal, such as six horses, six pigs, and six cows. This results in three signs that each say twelve. They will see that the number of animals is always *half* the number on the signs. They may notice that while the signs total 36, the total of the animals is half of that: 18. This is true in all cases. Have the students create puzzles of their own to test this conjecture.

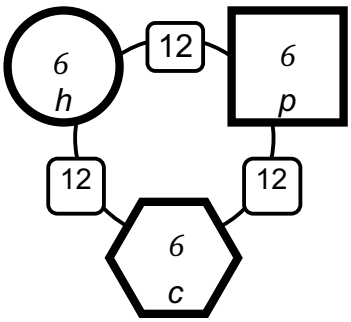

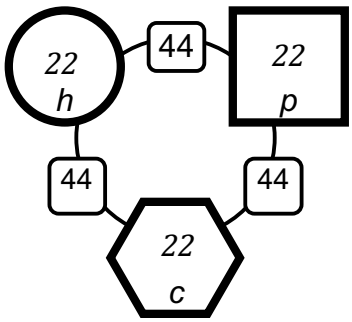

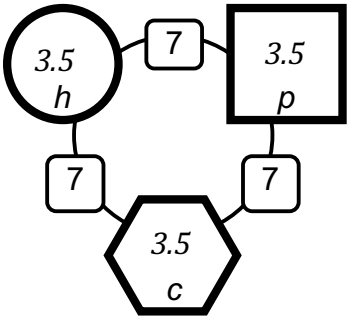

4 Next, ask the students to find a way to solve problems in which *two* of the signs are equal like the first sample. After solving a series like these, the students will discover that two identical signs results in two identical pens. Oddly though, the pen with the different number of animals is between the two identical signs. The opposite is also always true: the

Good Tip!

Even young students will enjoy using the guess-and-check method to discover solutions to the puzzles. They will also enjoy making puzzles for classmates to solve.

© 2018 by Brad Fulton and TTT Press

two identical pens flank the different sign. *However, the fact still remains that the total of the signs is twice the total of the animals*. This is a critical observation.

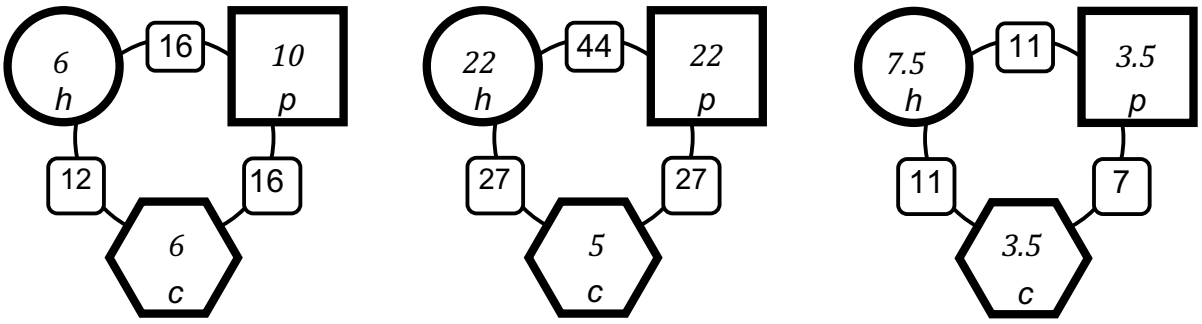

5 It is important to give students multiple opportunities to solve each of these sets of problems to develop number sense and to help guide them in discovering and testing patterns and predictions.

I like to use these steps in helping my students develop these problem solving strategies.

a. Solve a problem the teacher has provided.
b. Solve a few similar problems provided by the teacher.
c. Look for patterns, similarities, and rules.
d. Test these ideas on different types of numbers: larger numbers, fractions or decimals, negative numbers. Do the rules still work?
e. Students design problems of their own to test their conjectures. This provides perhaps as many as 30 new data samples.
f. Try to reason and explain why the rule is working.
g. Try to capture the rule algebraically.

Conjecture: a guess about what might happen, like a hypothesis in science. Unlike a scientific hypothesis which is *supported* with observational data, a mathematical conjecture can be *proven* with deductive reasoning.

6 For example, students may have noticed that the sum of the signs is twice the sum of the animals as previously mentioned. If they haven't yet made this observation, have them make a table like the one shown here. Once they make this observation, ask them to test it with other numbers. The third example in the table uses fractions, but does it work if the number of animals is negative? (Indeed, it does.) Then have

Sum of signs	Sum of animals
36	18
132	66
21	10.5

© 2018 by Brad Fulton and TTT Press

them make problems of their own to see if it still works. Again it will always works. At this point, students have tested this *inductively* through observations of patterns.

Once they are at this stage, it is an incremental step to get them to follow or develop a deductive proof. I have been able to model this successfully in a heterogeneously grouped seventh grade classroom in which the students had little exposure to algebraic reasoning. I did it in this way. Let's assume that the number of horses is represented by the variable *h*. Likewise we will represent the quantities of pigs and cows by *p* and *c* respectively. Then a pen would look like this:

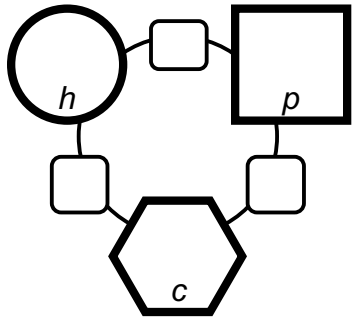

If we add the "number" of animals in each pen, then the signs would look like this:

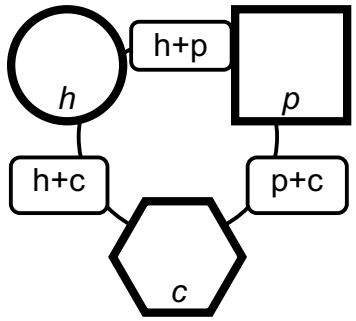

Adding the three *pens* gives us $h+p+c$.

Adding the *signs* gives us:

$$(h+p) + (p+c) + (h+c) = 2h+2p+2c = 2(h+p+c)$$

Thus the sum of the signs is twice the sum of the pens. This is a deductive proof.

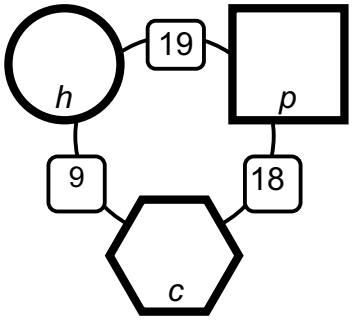

7 Now it is time to study pens with three different numbers of animals. I begin with pens that *almost* have two identical

© 2018 by Brad Fulton and TTT Press

signs. In this example, the sum of horses and pigs is 19 while the sum of cows and pigs is 18. If we think about that, we must conclude that the there are more horses than cows since replacing cows with horses increases the sum by one. And we also realize that there must be *one more* horse than cows since 19 is one more than 18. This gives us two statements:

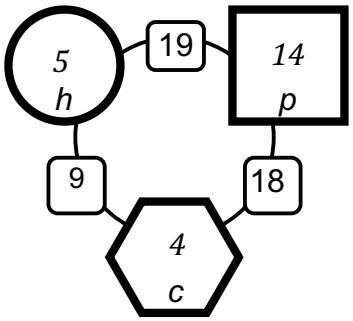

- The sum of the horses and cows is nine.
- The number of horses is one more than the number of cows.

We are then looking for numbers that add up to nine but *are one apart*. The only solution to this 5+4. Since we know there are more horses than cows, there are 5 horses and 4 cows. At this point we are home free and can solve for the number of pigs.

8 This will actually work with any numbers even if they are not one apart. It also works with any pairs of numbers. In the example to the right, there are 21 horses and cows and 17 pigs and cows. Thus replacing the pigs with horses increases the total by four from 17 to 21. There must be four more horses than cows. This leads us to two statements:

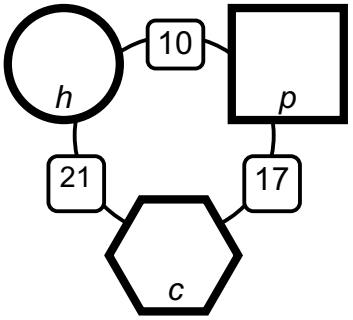

- The sum of horses and pigs is 10.
- Their difference is 4.

We need two numbers that add up to ten and are four apart. Here are some choices that use positive whole numbers.

0+10
1+9
2+8
3+7
4+6
5+5

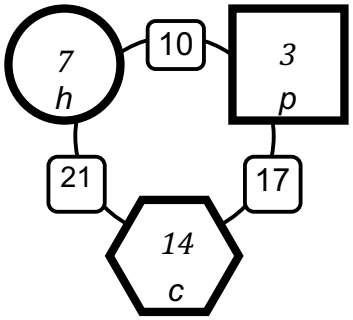

Only 3 and 7 are four apart, so they must be the pair we are seeking. Since there are more horses than pigs, there are 7 horses and 3 pigs. That means there are 14 cows.

This reasoning can also be represented and solved algebraically:

$$\begin{array}{r} (h + p) = 10 \\ \underline{-\ \ (h - p) = \ \ 4} \end{array}$$

Subtraction gives us: $2p = 6$

© 2018 by Brad Fulton and TTT Press

Dividing each side by two gives us: p = 3

Substitution will give us the other two solutions now that we have the number of pigs.

9 Here is another algebraic approach. Using the example on the right, let's use "h" to represent the number of horses. Since the total of the horses and pigs is 18, we can say:

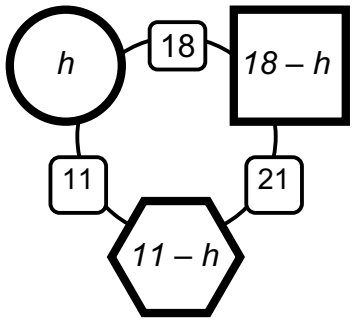

$$h + p = 18 \text{ or } p = 18 - h$$

Likewise, since the total of the horses and cows is 11, we can write:

$$h + c = 11 \text{ or } c = 11 - 18$$

This is shown in italics in the diagram. We know that the total of the signs is 18 + 11 + 21 = 50. Thus the pens contain 25 total animals.

$$h + p + c = 25, \text{ or}$$

$$h + (18 - h) + (11 - h) = 25$$

$$29 - h = 25$$

$$4 = h$$

10 Here is a third and very simple method of solving this problem using algebra. Since there are 25 total animals, and 18 are horses or pigs, it follows that the other seven animals (25 – 18) must be cows. Once we know that there are seven cows, we know there are four horses (11 – 7) and fourteen pigs (21 – 7). Generalizing this formula leads us to:

$$h + p + c = 25, \text{ and}$$

$$h + p = 18$$

By substitution we get:

$$(h + p) + c = 25$$

$$18 + c = 25$$

$$c = 25 - 18$$

$$c = 7$$

The number of horses and pigs is solved by substitution.

© 2018 by Brad Fulton and TTT Press

11 Here is yet another sophisticated but cumbersome solution involving simultaneous equations. In the previous problem we know that:

$$h + p + c = 25$$

$$h + p = 18$$

$$h + c = 11$$

$$p + c = 21$$

Solving for c in the last equation we get $c = 21 - p$. By substituting in the formula $h + c = 11$ we get $h + (21 - p) = 11$. this last equation simplifies to $h - p = -10$. we now have two equations with two identical unknowns:

$$h + p = 18$$

$$h - p = -10$$

By addition we get $2h = 8$, or $h = 4$.

12 If students are not ready for an algebraic approach, you can solve these problems using proportional reasoning. Let's use this strategy to solve the problem shown here. We'll begin by making a guess of 10 horses. Working clockwise from the horse pen, this would mean there would have to be 9 pigs. That in turn would lead us to conclude there are also 9 cows. However, this gives us a total of 10 horses and 9 cows for 19 total animals. That is much higher than our sign indicates: $h + c = 9$.

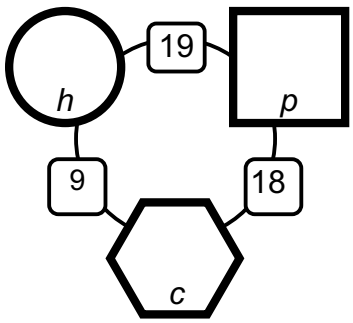

Rather than drop our guess by a lot, let's look at the effect of each decrease. If we lower our guess of the number of horses by one from 10 to 9, what affect will that have? It leads us to conclude there are 10 pigs and consequently, there must be 8 cows. This brings us to 17 horses and cows.

Notice that dropping our guess of horses by *one* from 10 to 9 dropped the sign from 19 to 17 – a decrease of *two*. That is the same 2:1 ratio that we saw earlier. This means that every drop of one animal results in the final sign being dropped by two.

Now let's use this to solve the puzzle without further guessing. When we thought the number of horses was 9, the sign between the horses and cows was 17; it was off by 8. Thus if we drop our horse guess by half of that: 4, we will have the answer. Since $9 - 4 = 5$, we now know there are 5 horses.

© 2018 by Brad Fulton and TTT Press

If there are 5 horses, there must be 14 pigs. That leads us to 4 cows. Then the sum of horses and cows is 5 + 4 = 9.

This means that in future problems we can make *any initual guess* and use the 2:1 ratio to adjust it and land on the correct answer.

Journal Prompts:

Describe a pattern you found while solving these problems. Your description may take the form of, "When the signs have this characteristic, the pens will have this characteristic."

Homework:

Activity masters are provided for use as homework. A blank template is provided also so that you can create your own. Activity master 1 involves positive whole numbers less than 20. These problems can be solved using the guess and check method or any of the other strategies described in this handout. Activity master 2 uses positive whole numbers in the range of 0 to 100. Because of their greater magnitude, the guess and check method is less efficient for most students. Proportional reasoning and algebra lend themselves to this worksheet. The third activity master uses numbers in the range of -20 to 20 and is geared to students who need practice working with integers. The guess and check strategy will still work, but the more sophisticated techniques are more suited to this activity master. Answer keys follow.

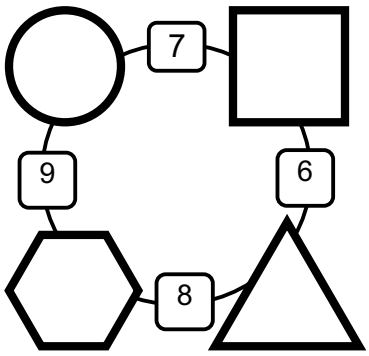

Taking a Closer Look:

Surprisingly, when an arrangement of four pens is used as shown on the right, there are either an infinite number of solutions as in the first example or no solutions at all. Advanced students may wish to explore why this occurs.

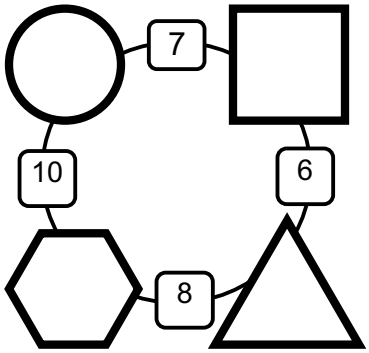

© 2018 by Brad Fulton and TTT Press

Assessment: ☑

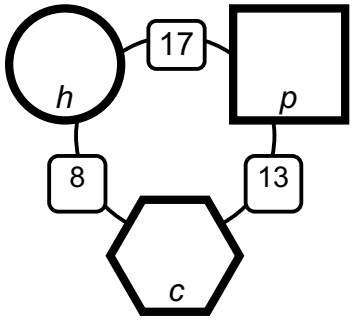

These circular reasoning puzzles are self-correcting. Once a guess is made in one pen, it will cause the adjacent pen to contain a specific number also. This will cycle around to the first pen where the student ends up verifying his or her original guess. Thus the student gets immediate feedback in a guess-and-check format. In the puzzle on the right, a student makes an initial guess of seven horses in the circle. This would mean that the square must contain 17 – 7 = 10 pigs. Then the hexagon would contain 13 – 10 = 3 cows. However, this would mean that the circle contains 8 – 3 = 5 horses. Obviously, the circle cannot contain seven horses and five horses, so the guess is incorrect. In fact, the final result of five horses seems to be telling us to guess a number of horses less than seven. Interestingly, the correct answer is the *average* of our original guess (seven) and the resulting check (five). Hmm...

Answer Keys:

Activity Master 1

	Horses	Pigs	Cows
A)	9	5	3
B)	6	2	12
C)	11	6	3
D)	14	1	7
E)	10	13	12
F)	20	13	6
G)	17	4	17
H)	16	0	11
I)	16	14	15
J)	9	15	19

Activity Master 2

© 2018 by Brad Fulton and TTT Press

	Horses	Pigs	Cows
A)	23	30	24
B)	16	17	33
C)	35	45	25
D)	42	50	48
E)	43	43	8
F)	40	50	41
G)	37	46	53
H)	3	95	4
I)	57	32	41
J)	99	98	99

Activity Master 3

	Horses	Pigs	Cows
A)	-7	3	11
B)	4	-3	-2
C)	10	1	-5
D)	-7	-6	-6
E)	-13	-7	-4
F)	-2	-8	11
G)	-8	-2	5
H)	-13	13	-3
I)	1	-11	-6
J)	4	2	-19

© 2018 by Brad Fulton and TTT Press

The Common Core Connection:

In addition to providing a platform for teaching the Common Core math standards listed below, this activity also fosters the Mathematical Practices. Specifically, students will use seven of the eight practices:

- Make sense of problems and persevere in solving them.
- Reason abstractly and quantitatively.
- Construct viable arguments and critique the reasoning of others.
- Model with mathematics.
- Attend to precision.
- Look for and make use of structure.
- Look for and express regularity in repeated reasoning.

Standards by grade level:

6th grade
CCSS.MATH.CONTENT.6.EE.A.2.A
Write expressions that record operations with numbers and with letters standing for numbers. *For example, express the calculation "Subtract y from 5" as 5 - y*.
CCSS.MATH.CONTENT.6.NS.C.5
Understand that positive and negative numbers are used together to describe quantities having opposite directions or values (e.g., temperature above/below zero, elevation above/below sea level, credits/debits, positive/negative electric charge); use positive and negative numbers to represent quantities in real-world contexts, explaining the meaning of 0 in each situation.

7th grade
CCSS.MATH.CONTENT.7.NS.A.1.D
Apply properties of operations as strategies to add and subtract rational numbers.
CCSS.MATH.CONTENT.7.NS.A.3
Solve real-world and mathematical problems involving the four operations with rational numbers.[1]
CCSS.MATH.CONTENT.7.EE.B.3
Solve multi-step real-life and mathematical problems posed with positive and negative rational numbers in any form (whole numbers, fractions, and decimals), using tools strategically. Apply properties of operations to calculate with numbers in any form; convert between forms as appropriate; and assess the reasonableness of answers using mental computation and estimation strategies. *For example: If a woman making $25 an hour gets a 10% raise, she will make an additional 1/10 of her salary an hour, or $2.50, for a new salary of $27.50. If you want to place a towel bar 9 3/4 inches long in the center of a door that is 27 1/2 inches wide, you will need to place the bar about 9 inches from each edge; this estimate can be used as a check on the exact computation*.

© 2018 by Brad Fulton and TTT Press

CCSS.MATH.CONTENT.7.EE.B.4
Use variables to represent quantities in a real-world or mathematical problem, and construct simple equations and inequalities to solve problems by reasoning about the quantities.

8th grade
CCSS.MATH.CONTENT.8.EE.C.8.C
Solve real-world and mathematical problems leading to two linear equations in two variables. *For example, given coordinates for two pairs of points, determine whether the line through the first pair of points intersects the line through the second pair*.

High School
CCSS.MATH.CONTENT.HSA.REI.C.6
Solve systems of linear equations exactly and approximately (e.g., with graphs), focusing on pairs of linear equations in two variables.

© 2018 by Brad Fulton and TTT Press

Activity Master 1

Horses, Pigs, and Cows

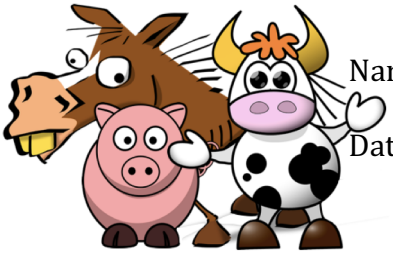

Name_____

Date_____ Class_____

Find the number of horses, pigs and cows in the circle, square, and hexagon. The clues between the polygons tell you the sum of the animals in the adjacent

Example:

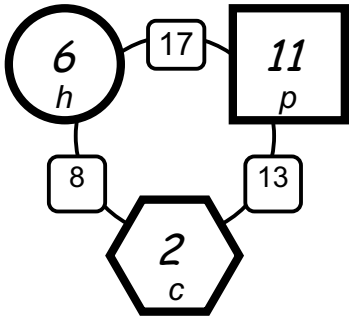

A

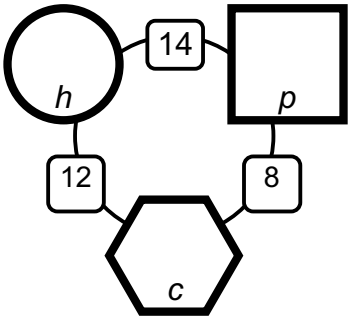

B

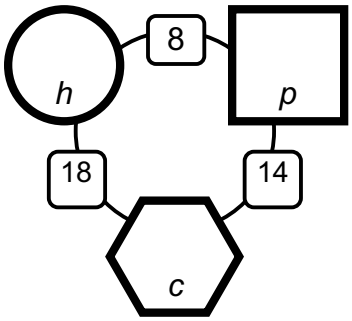

C

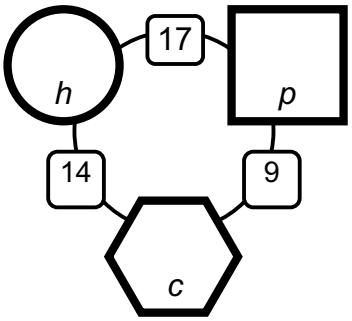

D

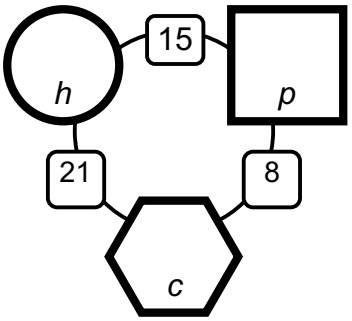

E

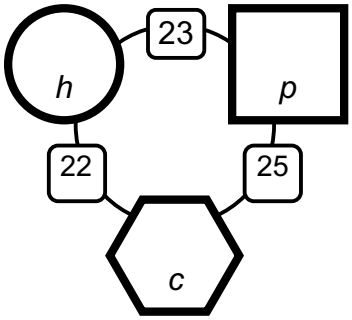

F

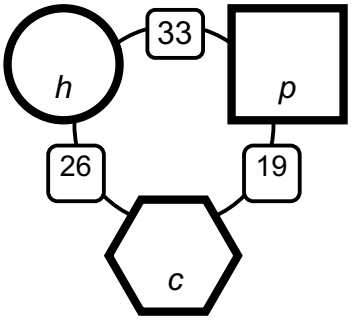

G

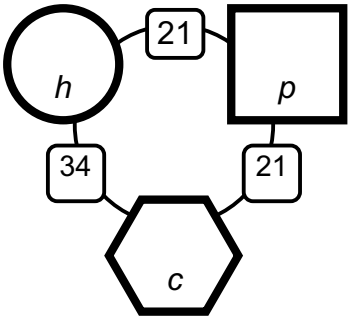

H

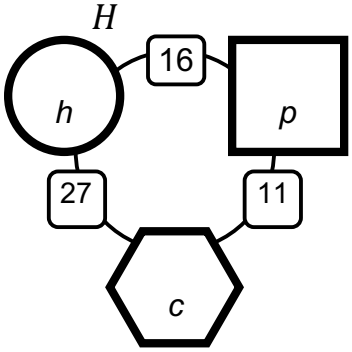

I

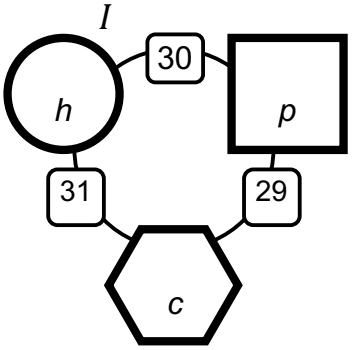

J

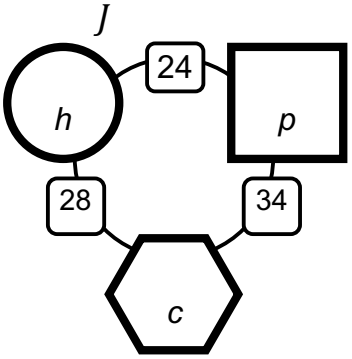

© 2018 by Brad Fulton and TTT Press

Activity Master 2

Horses, Pigs, and Cows

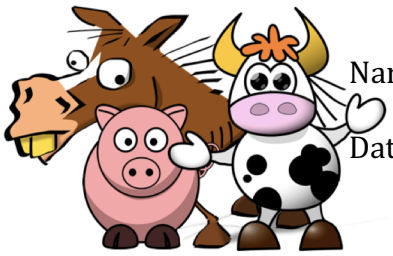

Name_____

Date_____ Class_____

Find the number of horses, pigs and cows in the circle, square, and hexagon. The clues between the polygons tell you the sum of the animals in the adjacent

Example:

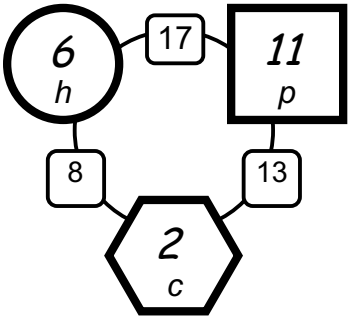

A

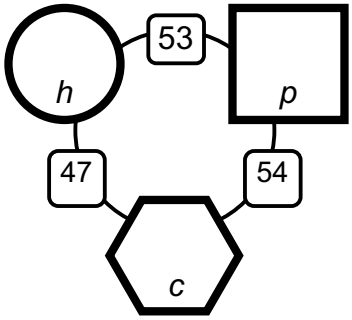

B

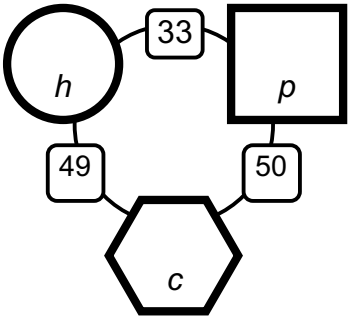

C

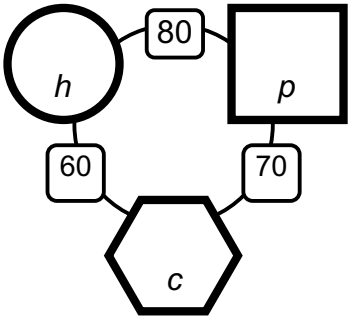

D

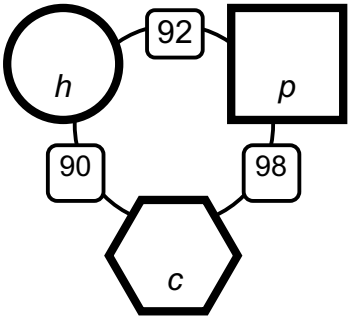

E

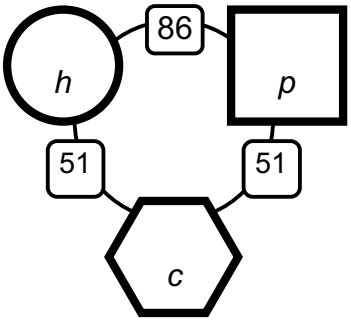

F

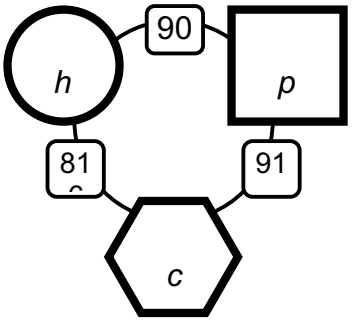

G

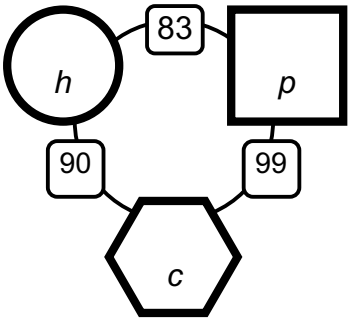

H

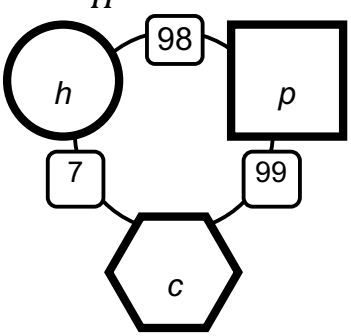

I

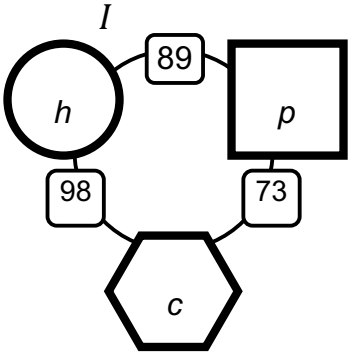

J

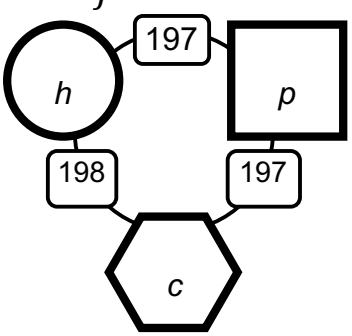

© 2018 by Brad Fulton and TTT Press

Activity Master 3

Horses, Pigs, and Cows

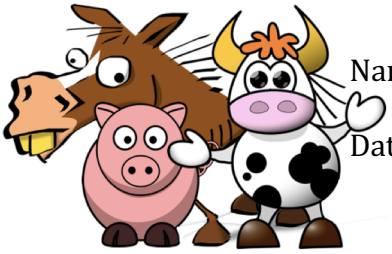

Name_____

Date_____ Class_____

Find the number of horses, pigs and cows in the circle, square, and hexagon. The clues between the polygons tell you the sum of the animals in the adjacent

Example:

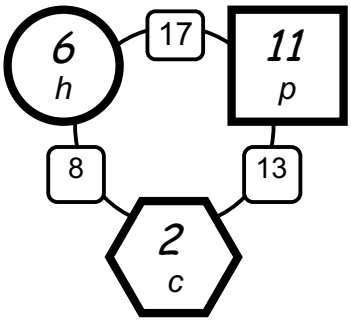

A

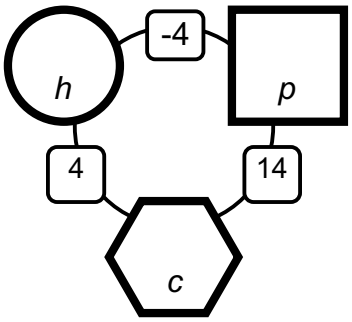

B

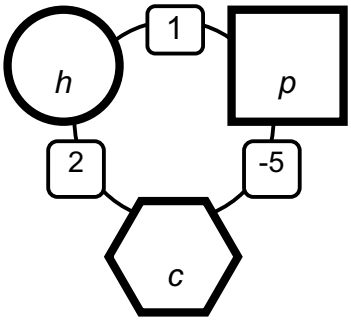

C

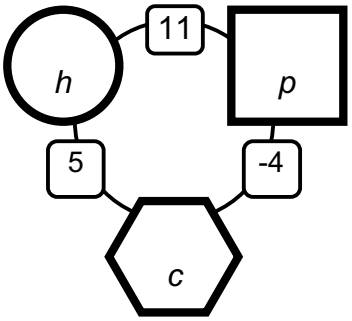

D

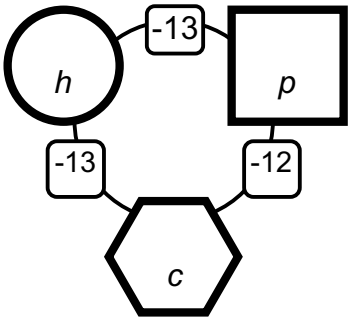

E

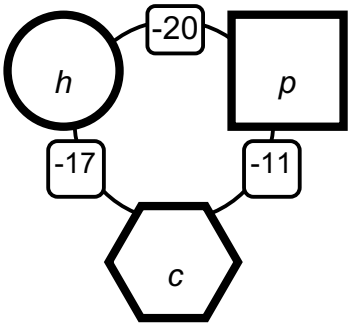

F

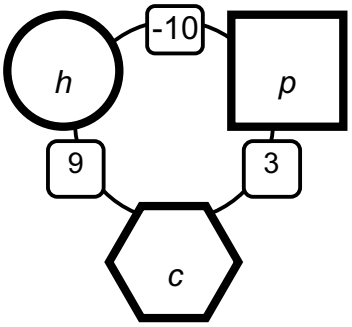

G

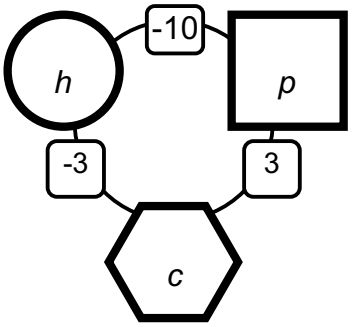

H

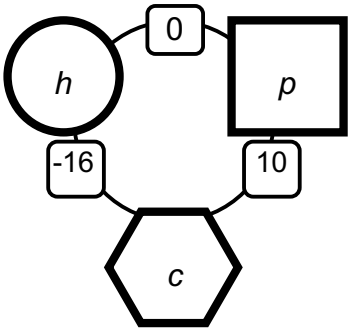

I

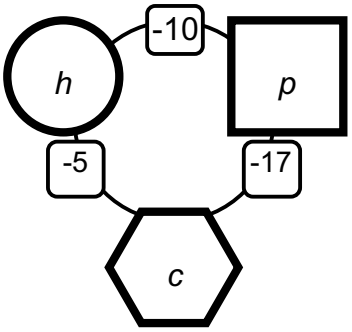

J

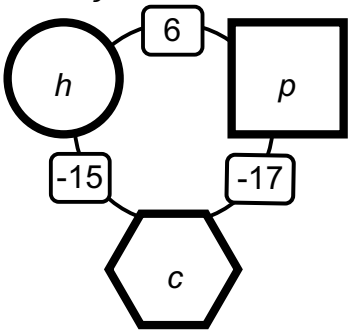

© 2018 by Brad Fulton and TTT Press

Activity Master

Horses, Pigs, and Cows

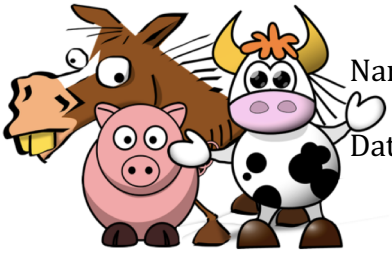

Name_____

Date_____ Class_____

Find the number of horses, pigs and cows in the circle, square, and hexagon. The clues between the polygons tell you the sum of the animals in the adjacent

Example:

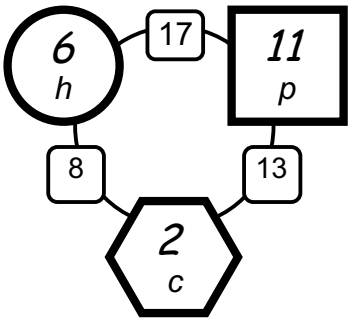

A

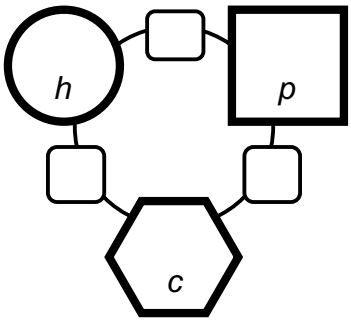

B

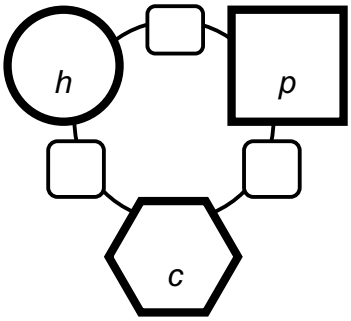

C

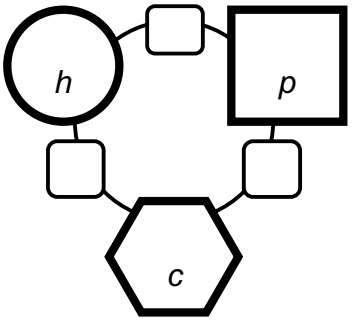

D

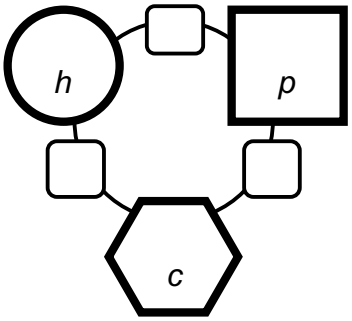

E

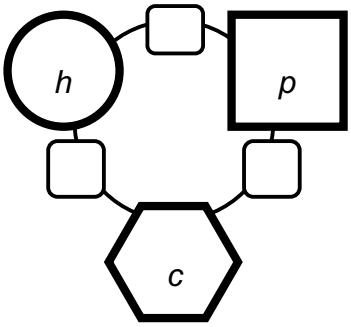

F

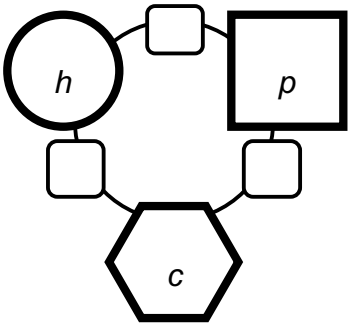

G

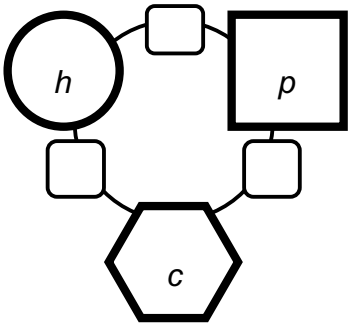

H

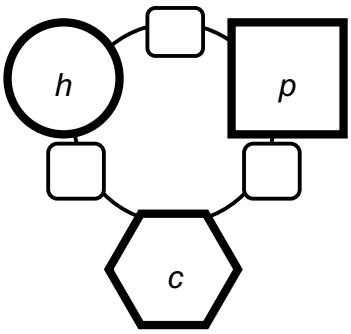

I

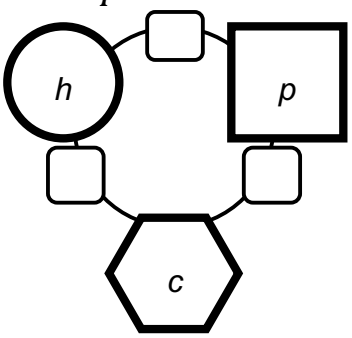

J

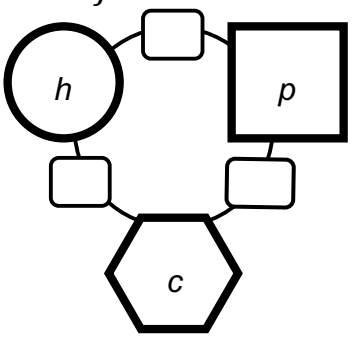

© 2018 by Brad Fulton and TTT Press

If you liked this activity, you might also like some of the other lessons available in my TeachersPayTeachers store. Simply search for "Brad Fulton".

You can also find many free and inexpensive resources on my personal website, www.tttpress.com. Be sure to subscribe to receive monthly newsletters, blogs, and activities.

Similar activities include:

- ***Foursquare Addition***: a great way to help students develop number sense as they practice addition and subtractions of whole numbers, decimals, and integers.
- **Pyramid Math**: another intriguing way to foster number sense as students practice addition and subtraction of all types of numbers.
- ***Four in a Row***: an engaging game that will give your students lots of fun practice with multiplication of whole numbers, decimals, fractions, and integers
- ***X Marks the Spot***: this creative and adaptable activity will help your students gain fluency with all types of numbers and all four operations.
- ***Winning Ways with Integers***: Four great strategies to help your students gain mastery with integers in all operations.

Feel free to contact me if you have questions or comments or would like to discuss a staff development training or keynote address at your site.

Happy teaching,

Brad

© 2018 by Brad Fulton and TTT Press